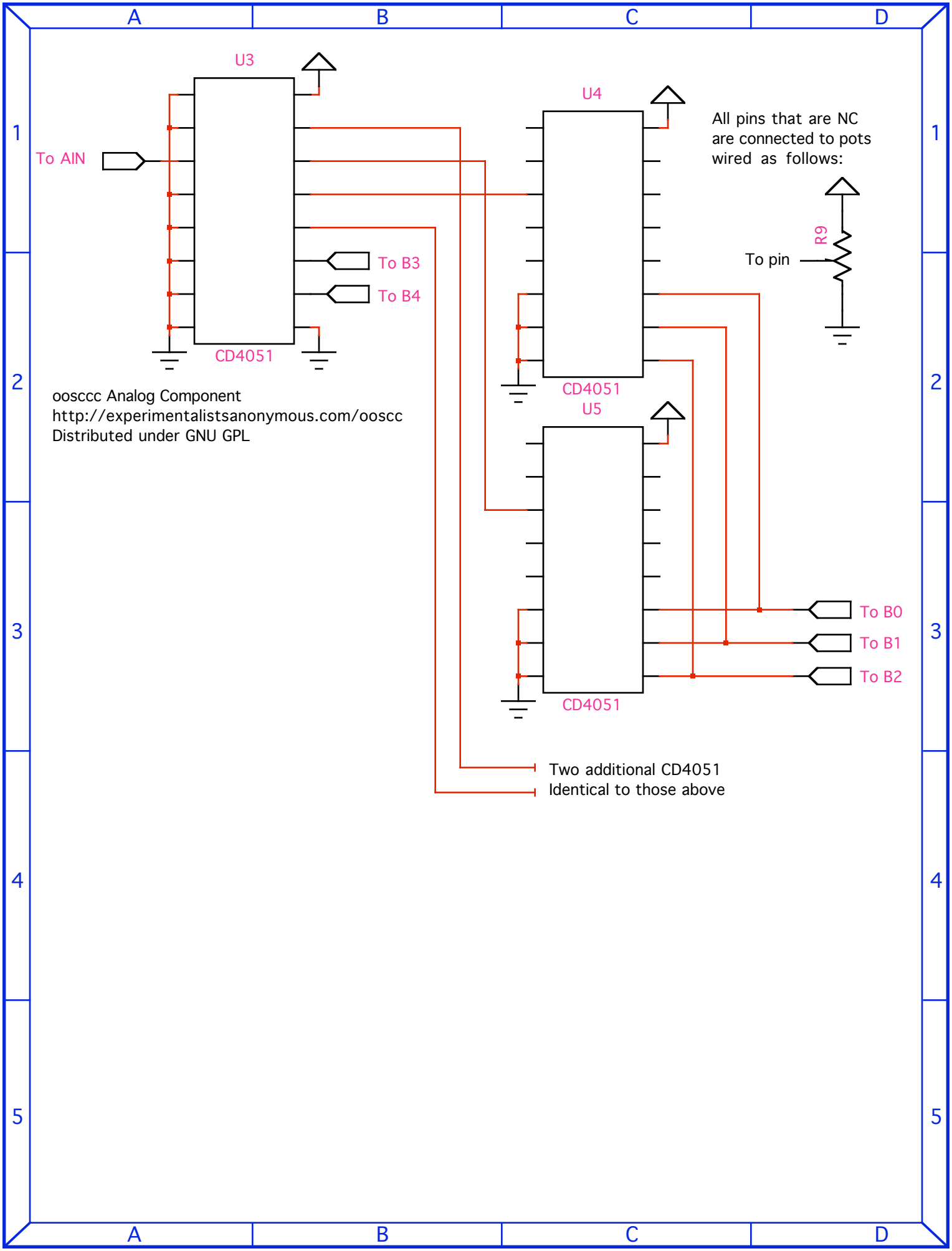
U3
To AIN
To B3
To B4
CD4051
U4
CD4051
U5
CD4051
All pins that are NC
are connected to pots
wired as follows:
R9
To pin
To B0
To B1
To B2
Two additional CD4051
Identical to those above
ooscc Analog Component
http://experimentalistsanonymous.com/ooscc
Distributed under GNU GPL